DETCON MODEL SW-AV1-DV2

Hazardous Duty Class I. Div 2, Multi-tone Alarm Station

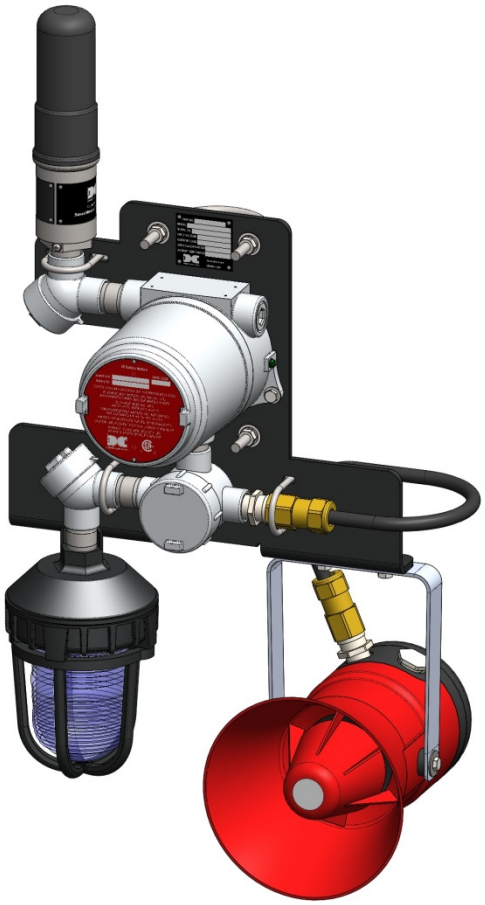

Operator's Installation and Instruction Manual
Also covers the V2-DV2 dual strobe units

DETCON, Inc.
4500 Technology Forest Dr. Suite 100,
The Woodlands, Texas 77381
Ph.281.367.4100 / Fax 281.298.2868
www.detcon.com

March 01, 2016 • Document # 3639 • Revision 1.1

This page left intentionally blank

Table of Contents

1.0 Description **1**
1.1 Strobe 2
1.2 Horn 2
1.3 Smart Battery Pack 3
1.3.1 Detcon's Smart Battery Pack *3*
1.3.2 D Cell Lithium Battery Pack *3*
1.4 Quad Battery Charger (Optional) 3
1.5 RXT Series Wireless Transceivers 4
2.0 Installation **5**
3.0 Operation **7**
4.0 Service and Maintenance **8**
4.1 Replacement of the batteries/battery pack 8
4.1.1 Units with 12V Smart Battery Pack *8*
4.1.2 Units with D-Size Non-Rechargeable Batteries *8*
5.0 Parts List **10**
6.0 Specifications **10**
7.0 Warranty **11**
8.0 Revision Log **12**

Table of Figures

Figure 1 Basic C1D2 Wireless Alarm Stations 1
Figure 2 Wireless Interconnect PCA 1
Figure 3 Strobe 2
Figure 4 Horn 2
Figure 5 Battery Pack 3
Figure 6 Quad Battery Charger 4
Figure 7 Dimensional 5
Figure 8 Typical Unit Wiring 6
Figure 9 Battery Orientation Diagram 9

This page left intentionally blank

Shipping Address: 4055 Technology Forest, Suite 100, The Woodlands, Texas 77381
Mailing Address: P.O. Box 8067, The Woodlands Texas 77387-8067
Phone: 888.367.4286, 281.367.4100 • Fax: 281.292.2860 • www.detcon.com • sales@detcon.com

1.0 Description

The Detcon SW-AV1-DV2 and SW-V2-DV2 Alarm Stations are wireless, battery powered alarm stations with a Strobe and a Horn. The AV1-DV2 incorporates a Horn and a Strobe, and the SW-V2-DV2 incorporates 2 Strobes. The Horn is capable of producing 32 possible alarm tones. The unit is designed for installation and use in Hazardous duty, corrosive work environments rated at Class I, Division 2, Groups C and D.

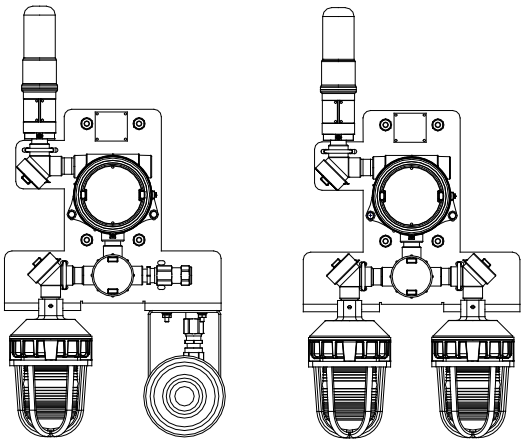

AV1-DV2
Strobe Horn Combo
Alarm Station

V2-DV2
Dual Strobe
Alarm Station

Figure 1 Basic C1D2 Wireless Alarm Stations

The alarm station can be positioned almost anywhere, since the wireless ability of the unit means that there is no need for running conduit or outside connections. The alarm station is powered by an internal battery pack. Communication is performed via the Detcon RXT-300 or RXT-320 series of transceivers. Access to the unit is only necessary for battery maintenance or exchange.

Internal wiring between components runs through the Wireless Alarm Interconnect PCA. This PCA controls the state of the alarms via communication with the Wireless Transceiver. When an alarm is triggered, the wireless transceiver will provide the interconnect PCA with the signal(s) necessary to activate the proper alarm(s).

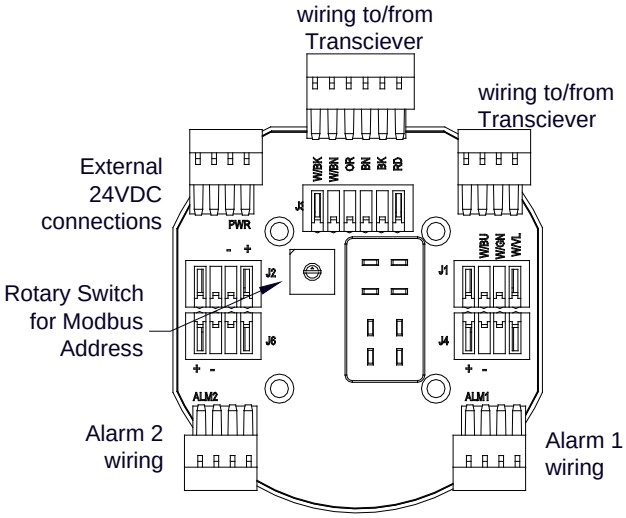

Figure 2 Wireless Interconnect PCA

The RXT-320 Transceiver has a rotary switch on the Wireless Alarm Interconnect PCA that is used to set the Modbus Address of the alarm unit. Each Wireless Alarm Interconnect PCA must have a unique Modbus™ address to be recognized on the network. The alarm station address must be in the range of 0x80-0x8F. The dial on the PCA sets the last digit (LSD) of the address, the first digit of the address is fixed at '8' hex. The Modbus™ address of the Interconnect PCA is utilized for monitoring the Battery. This switch is not used with the RXT-300 Transceivers.

1.1 Strobe

The alarm station Strobe is configured with choice of dome colors such as amber, blue, clear, green, magenta, or red. Dome guard is included. The rugged warning light is specifically designed for hazardous locations or corrosive environments where a very bright visual signal is required.

Figure 3 Strobe

1.2 Horn

This range of light weight all GRP, explosion proof sounders is intended for use in potentially explosive gas and dust atmospheres and has been designed with high ingress protection to cope with the harsh environmental conditions found offshore and onshore in the oil, gas and petrochemical industries. The Horn is capable of producing up to 125dB @ 1m output dependent upon the tone settings (refer to the "Sound Signals" Table).

Figure 4 Horn

1.3 Smart Battery Pack

The AV1-DV2 and V2-DV2 Alarm Stations are powered by a battery pack that enables it to be remotely mounted without the need for external cabling. Detcon offers several battery pack options. These options are factory installed. Contact Detcon for more information on these options.

Figure 5 Battery Pack

1.3.1 Detcon's Smart Battery Pack

The 12V 2200mAh Smart Battery Pack (Detcon's part number 976-0BP303-120) consists of rechargeable Lithium-Ion batteries and is equipped with integrated safety electronics that include a fuel gauge, voltage monitor, and current and temperature monitoring circuits. This "smart" circuitry continuously monitors the battery's condition and reports critical status information to the wireless transceiver via the Modbus™ registers. The battery packs are designed to plug into an 8-pin Beau connector on the Terminal Board that the sensor is connected to. The battery Pack and Terminal Board are mounted and sealed in Detcon's Class I Div 1 Aluminum Condulet to protect them from exposure to outside elements and allow use in Class I Div 2, Gr C, and D areas. Operating periods before recharge will vary based on alarm usage, but can be as long as 3.5 months for the 12V 2200mAh battery pack. Improper use of the battery pack may be hazardous to personnel or the environment and will void the warranty.

1.3.2 D Cell Lithium Battery Pack

The D Cell Lithium Battery Pack (Figure 9) contains five 3.6V Lithium Primary D size batteries which are not re-chargeable. This battery pack provides the unit with 18 volts. The batteries are contained in a battery holder mounted and sealed in Detcon's Class I Div 1 Aluminum Condulet to protect them from exposure to outside elements and allow use in Class I Div 2, Gr C, and D areas. The alarm station can operate for up to 9 months before battery replacement is needed. Improper use of the battery pack may be hazardous to personnel or the environment and will void the warranty.

1.4 Quad Battery Charger (Optional)

Detcon's Smart Battery Pack can be charged as needed using Detcon's optional Quad Battery Charger which can charge up to four battery packs at one time. The Quad Battery Charger comes with a plug-in AC/DC adapter that plugs into a standard 120VAC outlet for power. The DC end of the adapter plugs into the DC power jack of the charger providing 24VDC. The Quad Battery Charger has four charging ports, each with 8-

pin Beau connectors for battery pack connection. The ports and connectors are keyed to prevent incorrect positioning and connection. Each port has its own “FAULT” LED indicator and “CHARGE” LED indicator and will display either a red light or green light depending on the status of each battery being charged. Charging times will vary depending on the charge state of each battery pack, but a full charge of a depleted battery pack can take up to 24 hours.

Figure 6 Quad Battery Charger

When first powered on and with no battery packs connected to the charger, all the LED indicators on the Quad Charger should be green. When a battery pack is seated into a charging port, the “CHARGE” LED will go from green to red indicating the battery pack is not sufficiently charged. Once fully charged, the LED will go from red to green and the battery pack is ready to be used.

The “Fault” LED should remain green indicating that there are no problems with the battery pack or charging port. If the “Fault” LED turns red with the battery pack connected, then there is a problem or issue with the battery pack and it should not be used and be removed immediately. If the “Fault” LED turns red without a battery pack connected to the charge port, then there is a problem or issue with the port and that port should no longer be used.

Battery packs can remain connected to the charger even after a full charge indication (Green “Charge” LED) is shown due to the protection circuitry of the batter pack which prevents any overcharging issues.

1.5 RXT Series Wireless Transceivers

The wireless function of the alarm station is made possible by Detcon’s RXT series wireless transceivers. These transceivers transmit signal data such as analog 4-20mA DC or serial Modbus™ and can support up to 32 devices. They operate at 2.4GHz and conform to non-licensed radio frequency appliance usage around the world. Wireless network integrity and security is accomplished using direct sequence spread spectrum wireless mesh technology. Wireless applications can be as simple as a single field device communicating with a host controller or any number of field devices forming a network of subscribers. Every device in the network is capable of functioning as a router and repeater for all other devices in the network. This means that subscribers can “hop” through neighboring devices to communicate with each other thereby widening network access points. This unique and innovative technology is designed to create a robust network that automatically routes around congestion and line-of-sight obstacles while improving throughput as subscriber device density increases.

Detcon offers two models of the wireless transceiver, Model RXT-300 and Model RXT-320. Both models are functionally similar with one major difference: the RXT-300 provides a network wide control processing capability, whereas the RXT-320 does not. Refer to each models instruction manual for more detailed information.

2.0 Installation

NOTE: The wireless alarm station is a precision instrument and care should be taken when handling it.

The SW-AV1-DV2 and SW-V2-DV2 Alarm Stations are made to be mounted on a 2” or 3” diameter pipe. Two 3” U-bolts with hardware are provided for mounting. The location for mounting the wireless alarm station should be carefully selected. Occasional access to the unit will be necessary for battery replacement and maintenance.

The unit should be properly grounded according to local electrical codes and specifications. No other wiring is necessary for these units, once the unit has been mounted, install the battery pack and the unit will begin normal operation.

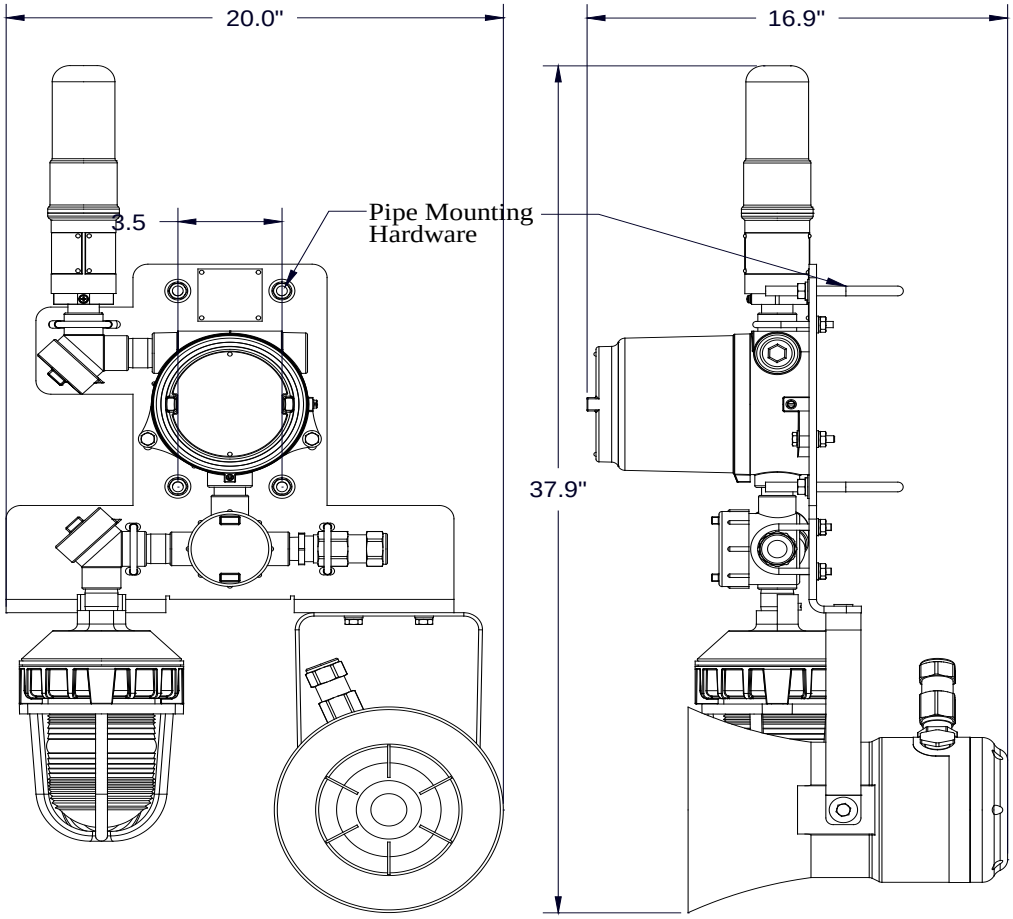

Figure 7 Dimensional

If the unit is equipped with the RXT-320 Transceiver, the Address Switch on the Wireless Interconnect PCA should be set to the correct address for the alarm station. This switch is normally set at the factory. Each Wireless Alarm Interconnect PCA must have a unique Modbus™ address to be recognized on the network.

The alarm station address must be in the range of 0x80-0x8F. The dial on the PCA sets the last digit (LSD) of the address, the first digit of the address is fixed at ‘8’ hex. The Modbus™ address of the Interconnect PCA is utilized for monitoring the Battery. For more information refer to the RXT-320 manual. Units equipped with RXT-300 Transceiver do not use this switch.

The SW-AV1-DV2 and the SW-V2-DV2 utilizes one battery pack. To install the battery pack, insure that the area is de-classified. Remove the cover from the junction box. Remove the Battery Cap, and install the battery in the junction box. The battery can only be installed one way, and orientation is mandated by the battery supports and the connector. Insure that the battery is completely seated, and replace the battery bracket cap over the battery tightening the screws until they are securely in place. The unit will power up, and begin normal operation. Replace the cover on the junction Box, and insure that the cover is completely screwed down and secured by the cap-head screw.

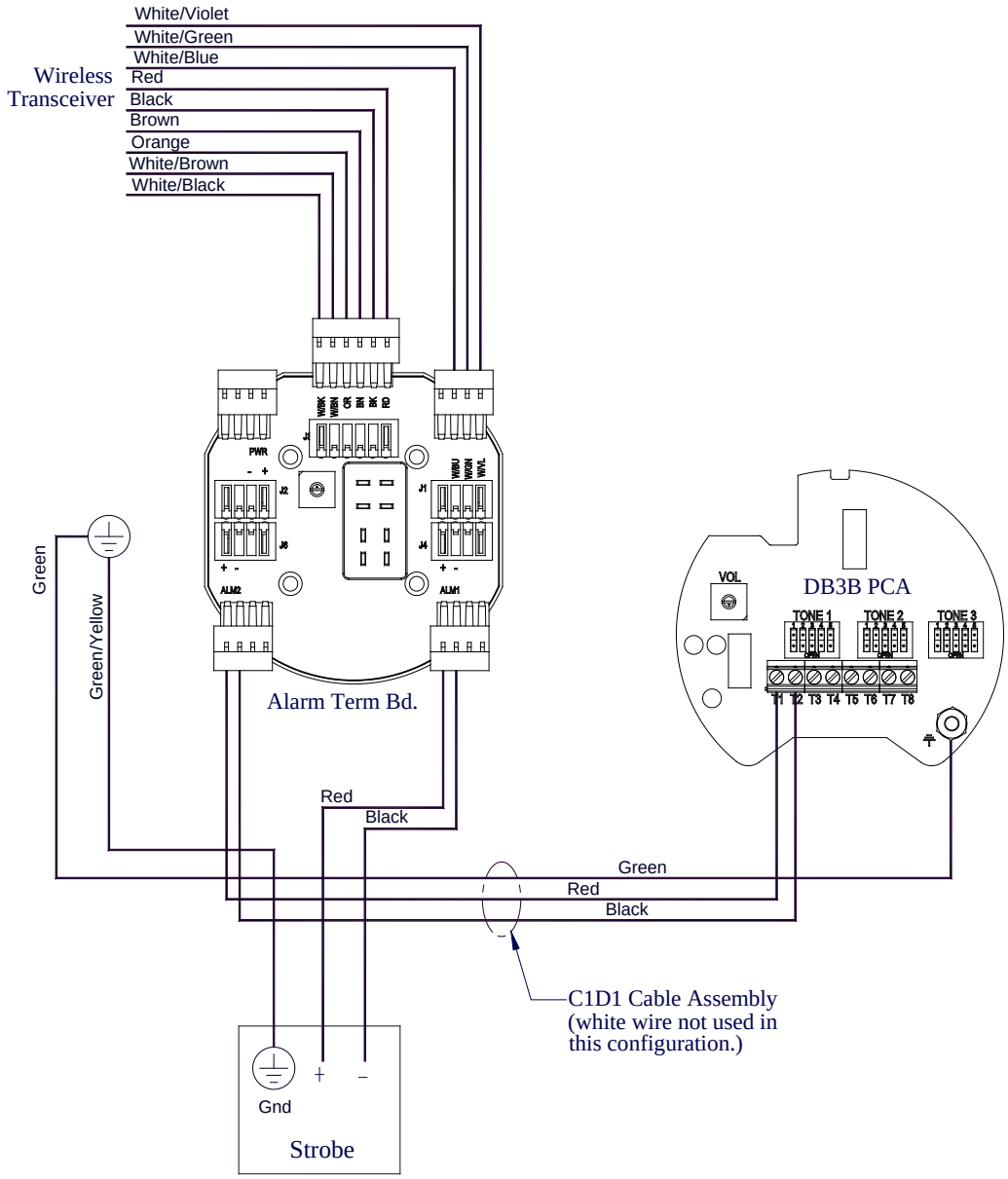

Figure 8 Typical Unit Wiring

3.0 Operation

The SW-AV1-DV2 Alarm Stations provide a strobe and a horn, the SW-V2-DV2 provides two strobes. The wireless alarm station is set to respond to alarms from the controlling unit. The controller/wireless network has independent control over the strobe and the Horn, and they will be activated when the appropriate alarm is activated.

All strobes have a flash rate of 1 Hz (one flash per second). This is preset by the manufacture and cannot be modified. The horn has up to 32 possible tone settings, for use in different configurations. The default tone setting of the horn is factory set. To change the tone setting of the horn, remove the rear cover from the horn, and set the TONE 1 dip switches on the PCA according to the Sound Signals Table (Tone 2 and 3 are not used in this configuration). The default setting for TONE 1 is selection 3 (11101) from the Sound Signals Table.

Table 1 Sound Signals

	TONE FREQ/DESCRIPTION	SWITCH	TONE
1	Alt Tones 800/970 Hz at 1/4 sec	11111	
2	Sweeping 800/970 Hz at 7Hz	11110	Fast Sweep(LF)
3	Sweeping 800/1000 Hz at 1 Hz	11101	Med Sweep(LF)
4	Continuous at 2850 Hz	11100	
5	Sweeping 2400-2850 Hz at 7 Hz	11011	Fast Sweep
6	Sweeping 2400-2850 Hz at 1 Hz	11010	
7	Slow Whoop	11001	Slow Whoop
8	Sweep 1200-500 Hz at 1 Hz	11000	Din Tone
9	Alt. Tones 2400/2850 Hz at 2 Hz	10111	
10	Int. Tone of 970 Hz at 1 Hz	10110	Back-Up Alarm(LF)
11	Alt. Tones 800/970 Hz at 7/8 Hz	10101	
12	Int. Tone at 2850 Hz at 1Hz	10100	Back Up Alarm(HF)
13	970Hz at 1/4 sec on 1 sec off	10011	
14	Continuous at 970 Hz	10010	
15	554Hz for 100ms / 440 Hz for 400ms	10001	French Fire Sound
16	Int. 660 Hz 150 ms on 150 ms off	10000	Swedish Fire Alarm
17	Int. 660 Hz 1.8 sec on 1.8 sec off	01111	Swedish Fire Alarm
18	Int. 660 Hz 6.5 sec on 13 sec off	01110	Swedish Fire Alarm
19	Continuous 660 Hz	01101	Swedish Fire Alarm
20	Alt 554/440 Hz at 1 Hz	01100	Swedish Fire Alarm
21	Int. 660 Hz at 7/8 Hz	01011	Swedish Fire Alarm
22	Int. 2850 Hz 150 ms on 100 ms off	01010	Pelican Crossing
23	Sweep 800-970 Hz at 50 Hz	01001	Low Freq. Buzz
24	Sweep 2400-2850 Hz at 50 Hz	01000	High Freq. Buzz
25	3 970Hz pulses 0.5on/0.5off, 1.5 off	00111	
26	3 2850Hz pulses 0.5on/0.5off, 1.5 off	00110	
27	Int. 3100 Hz 0.32s on / 0.68s off	00101	
28	Spare/Customer Tone	00100	
29	Spare/Customer Tone	00011	
30	Spare/Customer Tone	00010	
31	Spare/Customer Tone	00001	
32	Spare/Customer Tone	00000	

4.0 Service and Maintenance

Visual Inspection
The Alarm Unit should be inspected annually:

- Inspect the unit for signs of corrosion, pitting, and water damage.
- Inspect the inside of the Junction Box(s) for signs of water accumulation and/or signs of corrosion.
- Check internal wiring to ensure there are no loose or pinched wires and all connections are clean and tight.

Condensation Prevention Packet
A moisture condensation packet should be installed in every explosion proof Junction Box. The moisture condensation prevention packet will prevent the internal volume of the J-Box from condensing and accumulating moisture due to day-night humidity changes. This packet provides a critical function and should be replaced annually. Detcon's PN is 960-202200-000.

4.1 Replacement of the batteries/battery pack

The Controller incorporates a 'LOW BAT' (low battery) fault message which will appear on the controllers display for the associated alarm unit. This fault will appear when the battery voltage or the 'state of charge' drops below a preset threshold. Refer to the controller manual for more information.

4.1.1 Units with 12V Smart Battery Pack

NOTE	The safety approvals require removing the alarm unit to a non-hazardous area before installing or changing out the batteries or battery pack.

1. Remove the cover from the Junction-box.
2. Unscrew battery bracket lid, and swing the lid away from the battery pack.
3. Remove the battery pack from the J-box, and replace with new battery pack.
4. Swing the lid back over the battery pack, and re-tighten screws in battery bracket lid.
5. Replace the cover on the Jnction-box.

4.1.2 Units with D-Size Non-Rechargeable Batteries

NOTE	The safety approvals require removing the alarm unit to a non-hazardous area before installing or changing out the batteries or battery pack.

1. Remove the cover from the Junction-box.
2. Unscrew battery bracket lid, and swing the lid away from the battery pack.
3. Remove the battery holder from the J-box.
4. Loosen the four 4-40 Philips Head Screws from the bottom of the battery pack. It is not necessary to remove the screws, they are captive head screws, and will not fall out of the assembly.
5. The orientation of batteries is marked on the inside of the cover and the holder. Remove the batteries from the battery holder.
6. Replace the batteries with the same type (Detcon P/N 360-TL5930-000). Pay close attention to the orientation of the batteries. Installing the batteries incorrectly can cause damage to the batteries, the battery holder and the unit (refer to Figure 9). It is permissible to use only Tadiran Model TL-5930 batteries. **Do NOT** use regular 'D' size batteries, as this may cause damage to the sensor assembly.
7. Reinstall the bottom cover of the battery housing, and tighten the four 4-40 Philips head screws to reassemble the battery holder.
8. Swing the lid back over the battery pack, and re-tighten screws in battery bracket lid.

9. Replace the cover on the Junction-box.

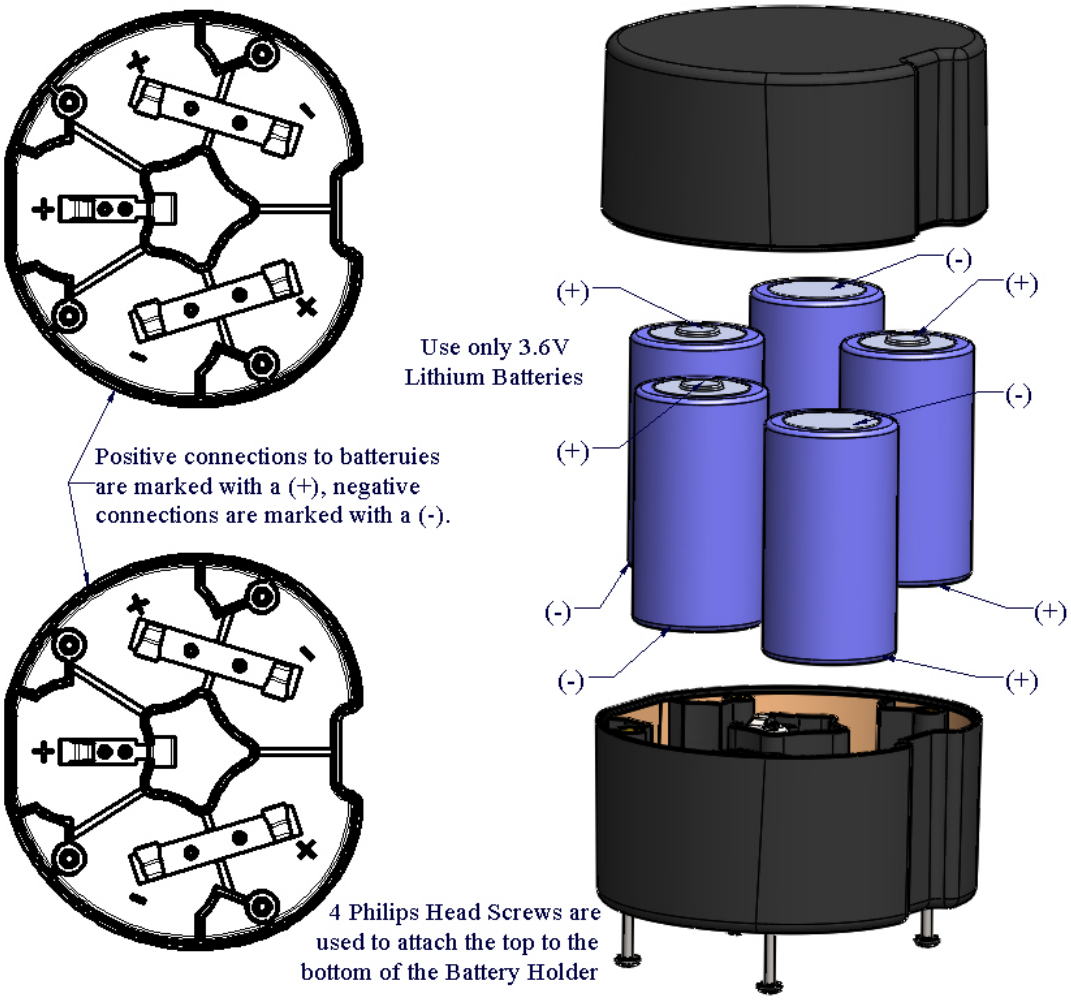

Figure 9 Battery Orientation Diagram

5.0 Parts List

Detcon Part #	Description
354-1916x6-024	24VDC Strobe, Ext Ground (x represents color of lamp) Strobe colors: Red (2), Amber (4), Green (5), Blue (6), Magenta (7), and Clear (9)
356-DB3007-024	Model DB3B Horn
500-005146-100	24V Wireless Alarm Interconnect PCA
976-000300-316	RXT-300 Wireless Transceiver
976-000320-316	RXT-320 Wireless Transceiver
976-0BP303-012	12VDC, 2200mAh Battery Pack
602-004402-100	D-Size Battery Holder (Uses 5 D-Size Lithium Batteries – Not Included)
360-SH20BA-000	Battery, Lithium 3.6V 'D'-size

NOTE: Battery Packs are specific to units, when replacing battery packs replace ***only*** with the same type.

6.0 Specifications

Input Voltage:	Battery
Current :	N/A
Mount:	Wall Mount or 2~3” Pipe Mount
Environment Rating:	Designed to meet NEMA 4 specifications
Area Classification:	Designed for use in C1D2 Groups C, D locations
Ambient Temperature Range:	-40°C to 65°C (D-cell battery pack) -20°C to 60°C (rechargeable battery pack)
Dimensions:	29.5”H X 14.75”W X 13”D AV1 – Strobe / Horn Units 29.5”H X 15”W X 13”D V2 – Dual Strobe Units 28.5”H X 14.65”W X 13”D A1 – Horn Only Units
Weight:	18lbs approx.
Dome Colors:	Amber, Blue, Clear, Green, Majenta and Red
Light Source/Lamp Style:	LED
Lamp Life:	60,000 Hours
Flash Rate/Minute:	60
Sound Output:	Up to 125dB(A) @ 1 meter (Tone dependent)
Duty Cycle	Not rated for continuous duty (5 minute duty cycle)

7.0 Warranty

Detcon Inc., as manufacturer, warrants under intended normal use each new SW-AV1-DV2, SW-A1-DV2, and SW-V1-DV2 Alarm station to be free from defects in material and workmanship for a period of one year. The warranty period begins from the date of shipment to the original purchaser and ends one year thereafter. All warranties and service policies are FOB the Detcon Inc. facility located in The Woodlands, Texas.

8.0 Revision Log

Revision	Date	Changes made	Approval
0.0	02/10/11	Initial Release	LU
0.1	04/27/11	Combined Specifications Table, Updated Spare Parts List	LU
0.2	11/30/11	Updated Mounting Plate	LU
0.3	08/08/13	Update for new battery pack, new unit build, new PCA	LU
0.4	12/30/13	Corrections to Horn and other information	LU
1.0	03/04/15	Change Horn from DB3 to DB3B	LU
1.1	03/01/16	Update information for correctness	MM

Shipping Address: 4055 Technology Forest, Suite 100, The Woodlands, Texas 77381
Mailing Address: P.O. Box 8067, The Woodlands Texas 77387-8067
Phone: 888.367.4286, 281.367.4100 • Fax: 281.292.2860 • www.detcon.com • sales@detcon.com